Alle Rechte vorbehalten/ *All rights reserved*

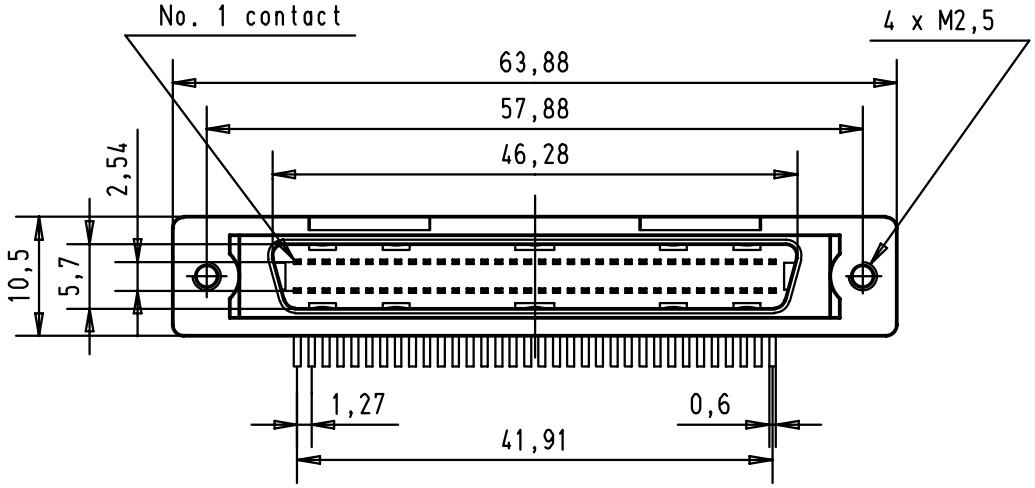

Printed board layout
Component side

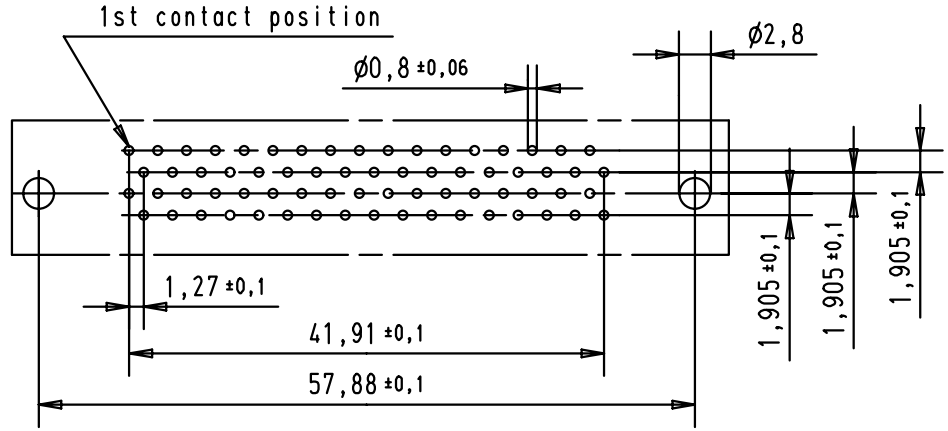

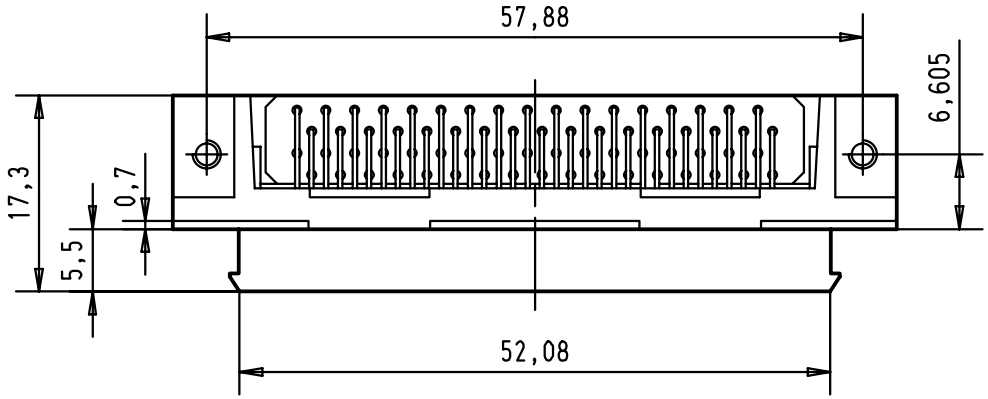

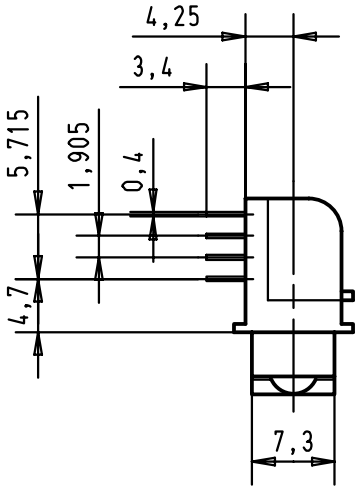

				Dat.	Name		
			Detail.	04 FEB 00	JB		
			Insp.				
			Stand.				
27941	30-AUG-00	JB					
26572	04 FEB 00	JB					
Mod.	Dat.	Name					

All Dim. in mm
Orig. Size DIN A 4

HARTING EURL
F-95972 Paris

har.mik® I/O pin/socket
68 poles male connector
with angled solder pins
and fixed latching

Maßstab/ *Scale* 1,5:1

TB 60 01 068 5232

Sub.

Blatt/ *Page* 1/1